Fujitsu VRF systems to KNX Application

Item number: IN775FGL00MO000

The Fujitsu application has been specially designed to allow bidirectional control and monitoring of Fujitsu VRF systems from a KNX installation. The solution allows the integration of up to 64 indoor units from a single interface.

Fujitsu to KNX - Up to 64 Indoor Units

Features and benefits

- **Full KNX interoperability**
  KNX standard datapoints (DPTs) are supported for simple integration into the KNX system.
- **Automatic identification**
  A scan function is available for automatic identification of the units present in the VRF system.
- **Individual indoor unit energy consumption signals**
  Energy consumption signals from each indoor unit are available, so they can be checked individually.
- **Commissioning-friendly approach with Intesis MAPS**
  Templates can be imported and reused as often as needed, significantly reducing commissioning time.
- **Direct access to the outdoor unit**
  Connection is simple, as the interface connects directly to the outdoor unit's communication bus.
- **Outdoor unit signals**
  Signals assigned to the outdoor unit are available to be used in the integration.
- **Datapoint support**
  A wide range of monitoring and control datapoints is available.
- **Configuration tool and interface automatic updates**
  Both the Intesis MAPS configuration tool and the interface's firmware can receive automatic updates.

Fujitsu VRF systems to KNX Application

General

Capacity	M: Up to 64 indoor units
Net Width (mm)	106
Net Height (mm)	90
Net Depth (mm)	58
Net Weight (g)	194
Packed Width (mm)	125
Packed Height (mm)	85
Packed Depth (mm)	140
Packed Weight (g)	356
Operating Temperature °C Min	0º
Operating Temperature °C Max	60º
Storage Temperature °C Min	-30
Storage Temperature °C Max	60
Power Consumption (W)	3
Input Voltage (V)	For DC: 12 .. 36 VDC ±10%, Max: 250 mA For AC: 24 VAC ±10 %, 50-60 Hz, Max: 127 mA Recommended voltage: 24 VDC, Max: 127 mA
Power Connector	3-pole
Configuration	Intesis MAPS
Installation Conditions	This gateway is designed to be mounted inside an enclosure. If the unit is mounted outside an enclosure, precautions should always be taken to prevent electrostatic discharge to the unit. When working inside an enclosure (e.g., making adjustments, setting switches, etc.), typical anti-static precautions should always be followed before touching the unit.
Content of Delivery	Intesis gateway and installation manual.

Fujitsu VRF systems to KNX Application

General

Not Included (in delivery)	Power supply not included.
Mounting	DIN rail mount (bracket included), Wall mount
Housing Materials	Plastic
Warranty (years)	3 years
Packaging Material	Cardboard

Identification and Status

Product ID	IN775FGL00MO000_KNX_FGL
Country of Origin	Spain
HS Code	8517620000
Dual Usage	No

Physical Features

Connectors / Input / Output	Power supply, EIA-485, KNX, Ethernet, HVAC port, Binary inputs (dry contact), Console port USB.
LED Indicators	Gateway and communication status.
Push Buttons	Factory reset. I-Am message (for BACnet only). Normal mode/programming mode switch (for KNX only).
DIP & Rotary Switches	EIA-485 serial port configuration.
Contains Battery	No

Certifications and Standards

Product Certifications	CE, CB, UKPSTI, UL
WEEE Category	IT and telecommunications equipment

Use Case

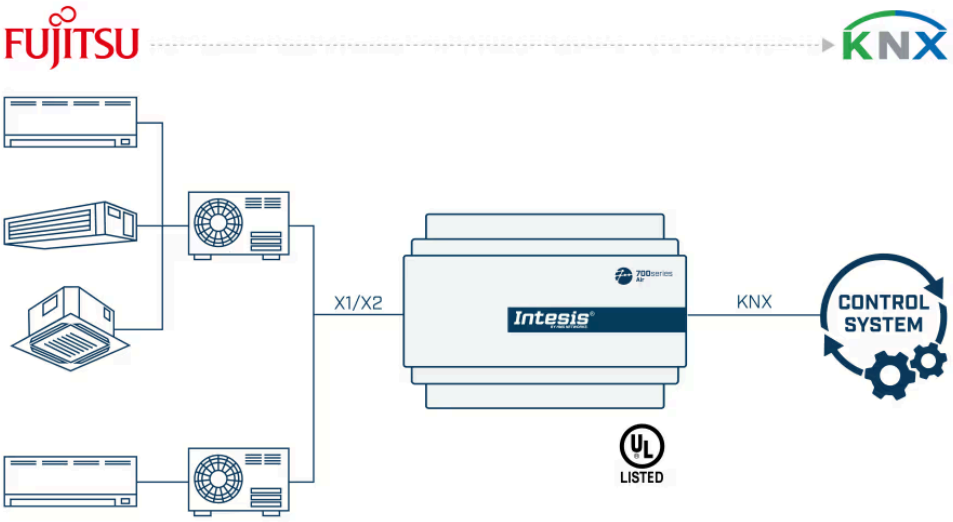

Integration example.

Use Intesis MAPS to change the protocol: BACnet, Modbus, KNX, MQTT, or Home Automation